Cambridge International Examinations
Cambridge International General Certificate of Secondary Education

CANDIDATE NAME	
CENTRE NUMBER	
CANDIDATE NUMBER	

PHYSICS **0625/41**

Paper 4 Theory (Extended) **October/November 2016**

1 hour 15 minutes

Candidates answer on the Question Paper.

No Additional Materials are required.

READ THESE INSTRUCTIONS FIRST

Write your Centre number, candidate number and name on all the work you hand in.
Write in dark blue or black pen.
You may use an HB pencil for any diagrams or graphs.
Do not use staples, paper clips, glue or correction fluid.
DO **NOT** WRITE IN ANY BARCODES.

Answer **all** questions.
Electronic calculators may be used.
You may lose marks if you do not show your working or if you do not use appropriate units.
Take the weight of 1.0 kg to be 10 N (acceleration of free fall = 10 m/s^2).

At the end of the examination, fasten all your work securely together.
The number of marks is given in brackets [ ] at the end of each question or part question.

The syllabus is approved for use in England, Wales and Northern Ireland as a Cambridge International Level 1/Level 2 Certificate.

This document consists of **16** printed pages.

DC (CW/FD) 116034/8
© UCLES 2016

CAMBRIDGE International Examinations

[Turn over

www.root19.com +91 - 9969 353 391

1 An astronaut on the Moon drops a feather from rest, off the top of a small cliff. The acceleration due to gravity on the Moon is 1.6 m / s^2. There is no air on the Moon.

(a) The feather falls for 4.5 s before it hits the ground.

(i) On Fig. 1.1, draw the speed-time graph for the falling feather. [2]

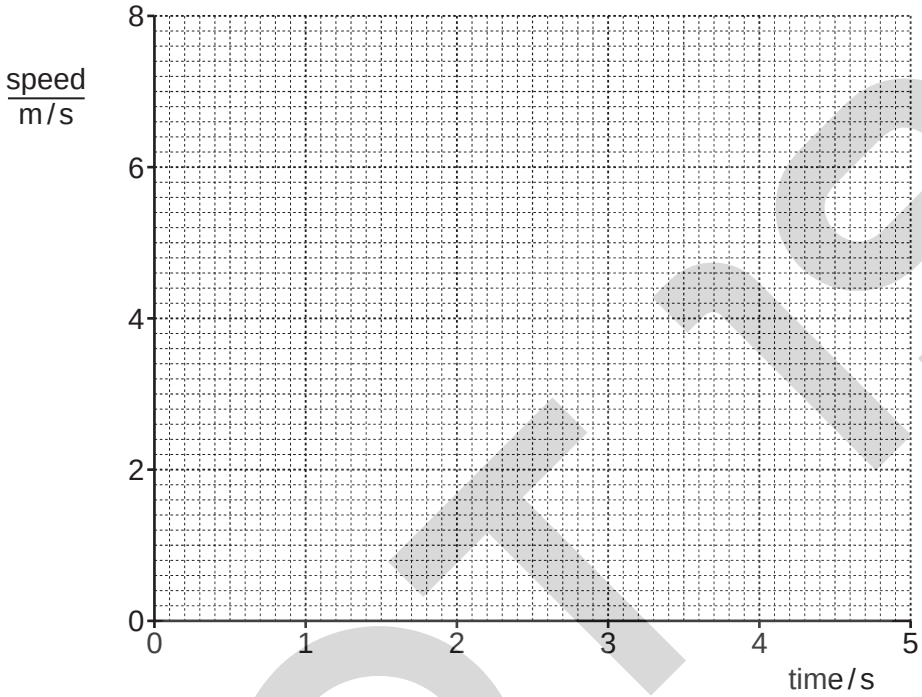

Fig. 1.1

(ii) Determine the distance fallen by the feather.

distance = ... [2]

(b) On Fig. 1.2, sketch the shape of a speed-time graph for the same feather falling on Earth.

Fig. 1.2

[2]

(c) Explain the difference between speed and velocity. Include the words *vector* and *scalar* in your answer.

.....

.....

.....

.....[2]

[Total: 8]

www.root19.com +91 - 9969 353 301

2 Fig. 2.1 represents the cross-section of an oil tanker in a river.

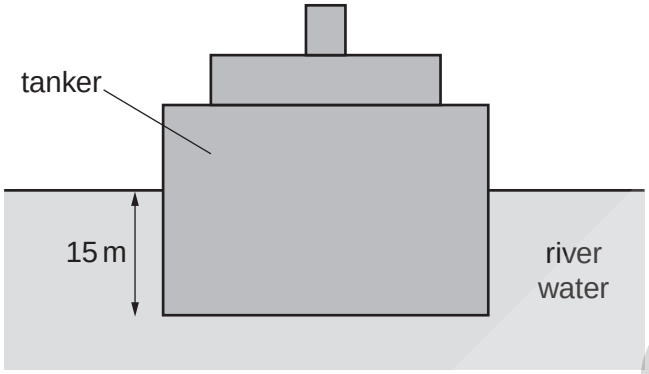

Fig. 2.1

(a) The bottom of the tanker is 15 m below the surface of the water. The area of the bottom of the tanker is 6000 m^2. The density of the water is 1000 kg/m^3.

(i) Calculate the pressure due to the water at the depth of 15 m.

pressure = ...[2]

(ii) Calculate the force due to the water pressure on the bottom of the tanker.

force = ...[2]

(iii) Deduce the weight of the tanker.

weight = ...[1]

© UCLES 2016
www.root19.com

+91 - 9969 353 391

(b) The tanker sails out onto a calm sea. The density of sea-water is greater than the density of river water.

State and explain any change in the depth of the bottom of the tanker below the surface.

.....

.....

.....

.....[3]

[Total: 8]

© UCLES 2016

www.root19.com
+91 - 9969 353 301

3 **(a)** A closed container holds a quantity of gas.

Explain, in terms of momentum, how molecules of the gas exert a force on a wall of the container.

.....

.....

.....[2]

(b) Fig. 3.1 shows a glass tube containing mercury.

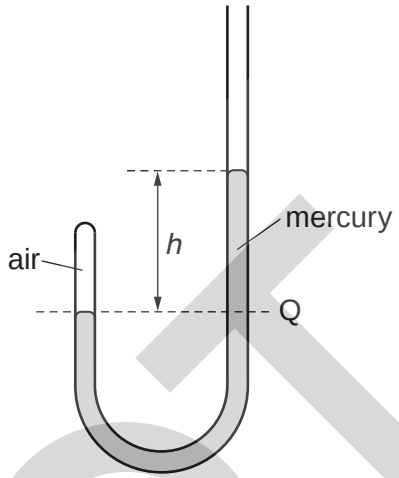

Fig. 3.1

The mercury traps a fixed mass of air in the left-hand arm of the tube. The right-hand arm of the tube is open to the atmosphere. The difference in mercury levels in the two arms is *h*.

(i) The pressure of the atmosphere on the surface of the mercury in the right-hand arm of the tube is 760 mm Hg. The distance *h* is 120 mm.

Calculate the total pressure at level Q, in mm of mercury (mm Hg), due to the atmosphere and the mercury above Q.

pressure = ... mm Hg [1]

(ii) State the pressure exerted by the air in the left-hand arm of the tube.

pressure = ... mm Hg [1]

www.root19.com +91 - 9969 353 391

(iii) Initially, the volume of air trapped in the left-hand arm of the tube is 12 cm^3.

More mercury is poured into the right-hand arm of the tube. The volume of the trapped air decreases. The temperature does not change. The difference in levels, *h*, becomes 240 mm.

Calculate the new volume of the trapped air.

volume = ...[3]

[Total: 7]

© UCLES 2016

www.root19.com
+91 - 9969 353 301

4 **(a)** In an experiment, cold water is poured into a bowl made of an insulating material. The container is placed in a draught-free room. After several hours, the volume and the temperature of the water are found to have decreased.

Name and describe the process that causes the decrease in the volume of the water, and explain why the temperature of the water decreases.

.....

.....

.....

.....

.....

.....

.....

.....[4]

(b) In a second experiment, using the same apparatus and the same initial amount of cold water as in **(a)**, an electric fan blows air over the top of the bowl.

Predict and explain how the results of this experiment compare with the results of the experiment in **(a)**.

.....

.....

.....[2]

(c) In a third experiment, the same initial amount of cold water as in **(a)** is poured into a **metal** bowl. The metal bowl is the same shape and size as the bowl used in **(a)**.

Compared with the experiment in **(a)**, the decrease in temperature is less in the same time.

Explain why.

.....

.....

.....[2]

[Total: 8]

www.root19.com +91 - 9969 353 391

5 **(a)** Compare the arrangement and motion of the molecules in ice and in liquid water.

ice .....

.....

water .....

.....
[2]

(b) An ice-hockey rink has an area of 1800 m^2. The ice has a thickness of 0.025 m. The density of ice is 920 kg/m^3.

(i) Calculate the mass of ice on the rink.

mass = ...[2]

(ii) The ice is at 0 °C. To form the ice, water at 0 °C was poured onto the floor of the rink and then frozen. The specific latent heat of fusion of ice is 3.3×10^5 J/kg.

Calculate the energy removed from the water to form the ice at 0 °C.

energy = ...[2]

[Total: 6]

www.root19.com +91 - 9969 353 301

6 **(a)** **(i)** State a typical value for the speed of sound in air.

speed = ...[1]

(ii) State the range of frequencies that can be heard by a healthy human ear.

.....[1]

(b) A sound wave in air has a wavelength of 22 mm.

Fig. 6.1 represents wavefronts of this sound. These wavefronts are successive compressions.

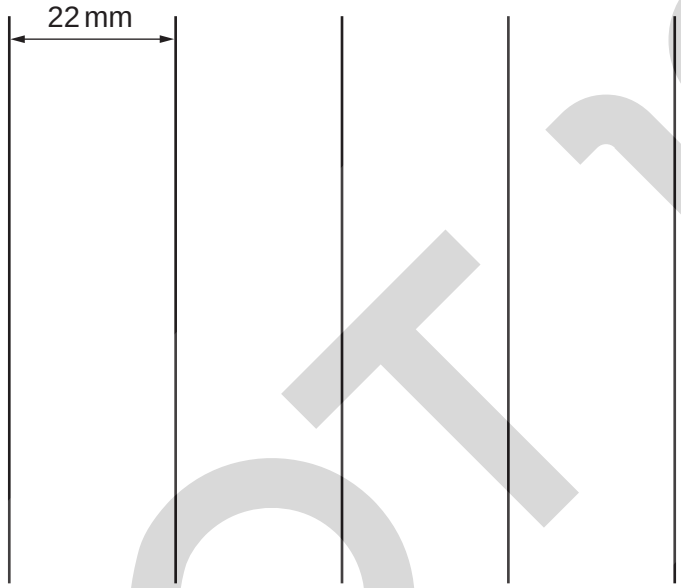

Fig. 6.1

(i) Using your value for the speed of sound in **(a)(i)**, calculate the frequency of the sound wave.

frequency = ...[2]

(ii) On Fig. 6.1, draw dotted lines to represent **three** different rarefactions. [1]

(iii) State, in terms of both molecules and pressure, what is meant by a *rarefaction*.

.....

.....

.....

.....[2]

[Total: 7]

www.root19.com +91 - 9969 353 391

7 Fig. 7.1 shows a box ABCD.

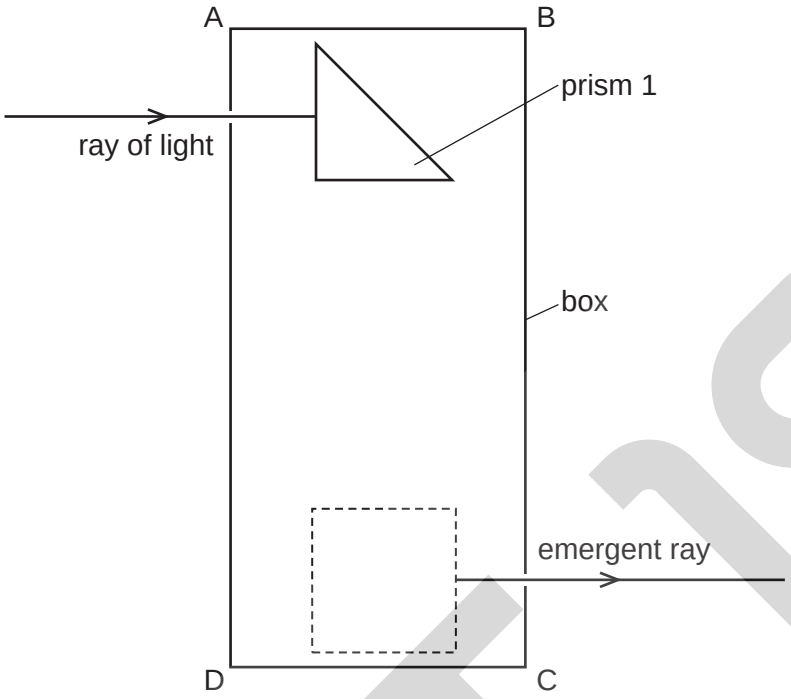

Fig. 7.1

The box contains two identical glass prisms, one of which is shown. Light incident on prism 1 undergoes total internal reflection within the glass.

(a) **(i)** On Fig. 7.1, complete the path of the ray of light through prism 1. [2]

(ii) On Fig. 7.1, draw a second prism inside the dashed square, positioned so that the light reflects inside the glass and emerges from the box as shown. Complete the path of the ray. [2]

(b) Select the statements that correctly describe the necessary conditions for the light to undergo total internal reflection. Tick **two** boxes.

☐ The angle of incidence in the glass is less than the critical angle of light in the glass.

☐ The angle of incidence in the glass is greater than the critical angle of light in the glass.

☐ The angle of reflection in the glass is equal to the angle of refraction.

☐ The speed of light in the glass is greater than the speed of light in air.

☐ The speed of light in the glass is equal to the speed of light in air.

☐ The speed of light in the glass is less than the speed of light in air.

[2]

[Total: 6]

www.root19.com +91 - 9969 353 301

8 A battery is made up of 8 cells in series. Each cell has an e.m.f. of 1.5 V.

The battery is connected to one 8.0 Ω resistor for 40 minutes.

(a) Calculate the e.m.f. of the battery.

e.m.f. = ...[1]

(b) Calculate the energy transferred from the battery in 40 minutes.

energy = ...[4]

(c) Describe the energy changes that take place during the 40 minutes.

.....

.....[2]

[Total: 7]

© UCLES 2016
www.root19.com

+91 - 9969 353 391

9 Fig. 9.1 shows a gardener cutting damp grass with a high-powered electric mower.

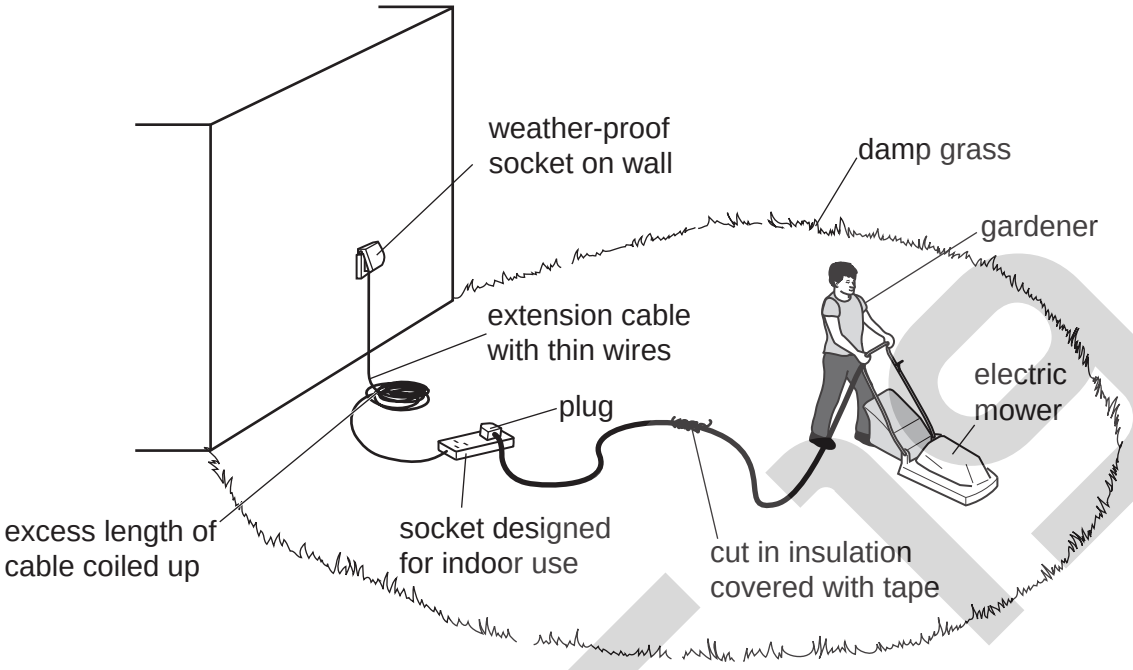

Fig. 9.1

The mower cable has thick wires appropriate for the current of the mower and the correct fuse. This cable is too short, and so the gardener uses an extension cable with thin wires, intended for use with a reading lamp. This cable has no fuse.

Discuss any dangers of the electrical arrangement shown in Fig. 9.1.

.....

.....

.....

.....

.....

.....

.....

.....[4]

[Total: 4]

www.root19.com +91 - 9969 353 301

10 Fig. 10.1 shows a wire AB suspended on two supports so that it is between the poles of a strong magnet.

The wire AB is loosely held so that it is free to move.

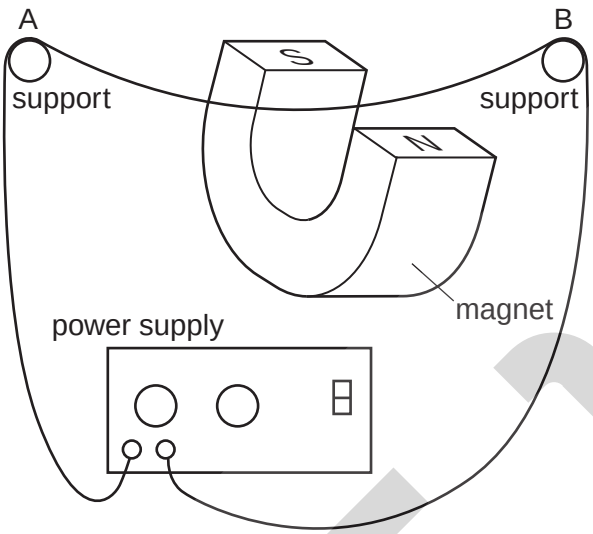

Fig. 10.1

Describe and explain any movement of the wire AB when there is

(a) a large direct current (d.c.) in the wire in the direction from A to B,

.....

.....

.....

.....[3]

(b) a large alternating current (a.c.) in the wire.

.....

.....

.....

.....[2]

[Total: 5]

www.root19.com +91 - 9969 353 391

11 **(a)** State what is meant by

(i) an *electric field*,

.....

.....[1]

(ii) the direction of an electric field at a point.

.....

.....[1]

(b) Fig. 11.1 shows a positively charged sphere.

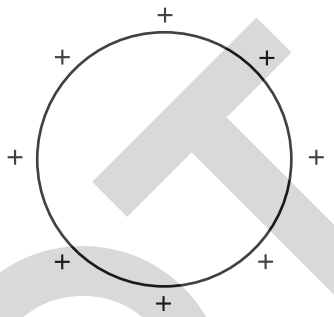

Fig. 11.1

On Fig. 11.1, draw the pattern of the electric field in the region around the positively charged sphere. Show the direction of the field with arrows. [2]

(c) The charge on the sphere in **(b)** is $+ 2.0 \times 10^{-5}$ C. A high resistance wire is now connected between the sphere and earth. It takes 20 minutes for the sphere to become completely discharged through the wire.

(i) Suggest why there is a current in the wire between the sphere and earth.

.....[1]

(ii) Calculate the average current in the wire between the sphere and earth.

average current = ...[2]

[Total: 7]

www.root19.com +91 - 9969 353 301

12 The nuclear equation below shows the decay of a plutonium (Pu) nucleus to an americium (Am) nucleus and a β-particle.

$$^{241}_{Z}\text{Pu} \rightarrow {}^{241}_{95}\text{Am} + \beta$$

(a) **(i)** State the quantity that is represented by the letter Z in this equation.

.....[1]

(ii) State the numerical value of Z.

Z = ...[1]

(b) The americium nucleus decays by the emission of an α-particle into a neptunium (Np) nucleus.

Complete the nuclear equation for this decay.

$$^{241}_{95}\text{Am} \rightarrow$$

[2]

(c) The half-life of this americium nuclide is 470 years. A sample of this nuclide contains 8.0×10^{14} atoms.

After some time, 6.0×10^{14} americium atoms have decayed.

Calculate the time required for this decay.

time = ...[3]

[Total: 7]

Permission to reproduce items where third-party owned material protected by copyright is included has been sought and cleared where possible. Every reasonable effort has been made by the publisher (UCLES) to trace copyright holders, but if any items requiring clearance have unwittingly been included, the publisher will be pleased to make amends at the earliest possible opportunity.

To avoid the issue of disclosure of answer-related information to candidates, all copyright acknowledgements are reproduced online in the Cambridge International Examinations Copyright Acknowledgements Booklet. This is produced for each series of examinations and is freely available to download at www.cie.org.uk after the live examination series.

Cambridge International Examinations is part of the Cambridge Assessment Group. Cambridge Assessment is the brand name of University of Cambridge Local Examinations Syndicate (UCLES), which is itself a department of the University of Cambridge.